KSC ISS/Payloads Processing Directorate

ISS-6A
Space Station Remote Manipulator System / Spacelab Pallet
Multi-Purpose Logistics Module

Todd Corey
NASA/KSC Mission Manager
April 5, 2001

Agenda

• Processing Overview	To Be Briefed
• Middeck Payload Requirements	To Be Briefed
• Launch Delay	To Be Briefed
• OMRS Status	No Concerns
• PRACA Status	No Concerns
• Launch Commit Criteria	None
• Open CoFR Exceptions	To Be Briefed
• Readiness Statement	To Be Briefed

Acronyms

ADVASC-GC	Advanced Astroculture – Growth Chamber
CBM	Common Berthing Mechanism
CGBA	Commercial Generic Bioprocessing Apparatus
CITE	Cargo Integration Test Equipment
CPCG-H	Commercial Protein Crystal Growth – High Density
DCSU	Direct Current Switching Unit
FRAM	Flight Releasable Attachment Mechanism
ICBC-3D	IMAX Cargo Bay Camera – 3 Dimensional
IMV	Inter-Module Ventilation
MEIT	Multi-Element Integrated Testing
MPEV	Module Pressurization Equalization Valve
MPLM-FM 2	Multi-Purpose Logistics Module – Flight Module 2
MTSAS-P	Module-to-Truss Segment Attachment Structure - Passive
PCS-TS	Physics of Colloids in Space – Test Section
PCG-STES	Protein Crystal Growth - Single Locker Thermal Enclosure System
SLP	Spacelab Pallet
SSRMS	Space Station Remote Manipulator System

Processing Milestones Completed

SSPF - SSRMS/SLP

• SSRMS on dock at KSC	5/16/99
• SSRMS Post Delivery Verification Test	6/21/99
• MEIT TC-4 (U.S. Lab / SSRMS)	8/20/99
• MEIT TC-4R (U.S. Lab / SSRMS)	3/11/00
• Integrate SSRMS to SLP/LSA	8/16/00
• SSRMS Launch Configuration Test / Video Acceptance Test	11/15/00
• FSE/GFE/SLP Integration	11/30/00
– EVA Crew Aids, Bolt Stowage Tube Assy, UHF Antenna/Adapter Beam, Launch Support Assy, LCA Frame, Grapple Fixture Adapter, FRGF, MTSAS-P	
• SSRMS/SLP Closeouts	3/29/01
• SSRMS/SLP Transfer to Canister	3/30/01

SSRMS on Pallet

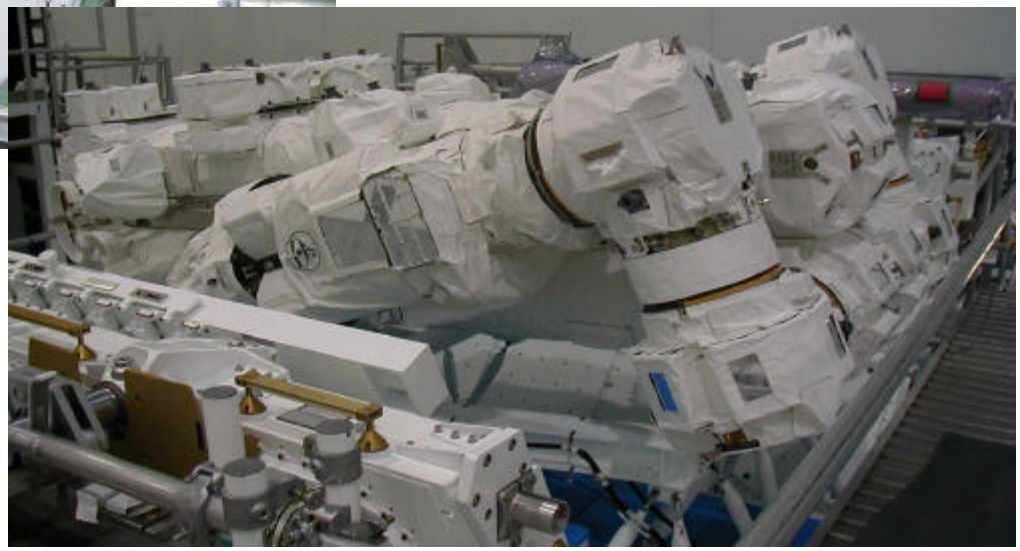

Processing Milestones Completed

SSPF – MPLM Element Rotation Stand (ERS) Ops

• MPLM FM-2 “Raffaello” on dock at KSC	8/4/99
• Post Delivery Verification Test	10/15/99
• Pre-rack Installation Checkout (PICO) test	11/22/00
• EXPRESS Rack/Payload Testing	1/16/01
• Rack & Resupply Stowage Platform Installation	1/27/01
• Aft Access Closure Installation	1/31/01
• MPLM Off-Gas Test	2/12/01
• FM-2 mod/open work	2/28/01

MPLM in ERS / Rack Insertion Device

Processing Milestones Completed

SSPF – MPLM Launch Package Integration Stand (LPIS)

• Transfer MPLM to LPIS	3/6/01
• CITE IVT	3/15/01
• CBM Leak Test	3/19/01
• Last Stowage Opportunity	3/24/01
• Final Internal Closeout	3/27/01
• Hatch Closure For Flight	3/28/01
• Dry Air Purge	3/28/01
• Gross Leak Test / Final Pressurization	3/29/01
• External Closeout	3/30/01
• MPLM Wt & CG / Transfer to Canister	4/2/01

Canister Rotation Facility

• Rotate Canister	4/4/01
• Launch Package to Pad	4/5/01

MPLM Exterior (LPIS)

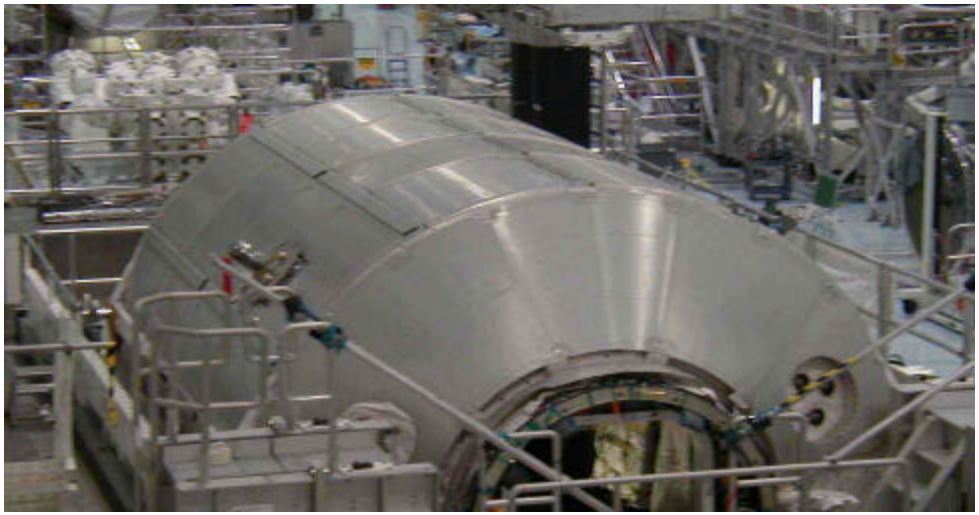

MPLM Interior

MPLM Interior

Processing Milestones Completed

OPF

• APCU & ICBC-3D Installation / Orbiter IVTs	2/22/01
• Passive FRAM Installation	3/3/01

Pad

• Active FRAM/ DCSU Install into Orbiter	3/27/01
• FRAM / DCSU / Orbiter IVT	3/28/01

FRAM/DCSU

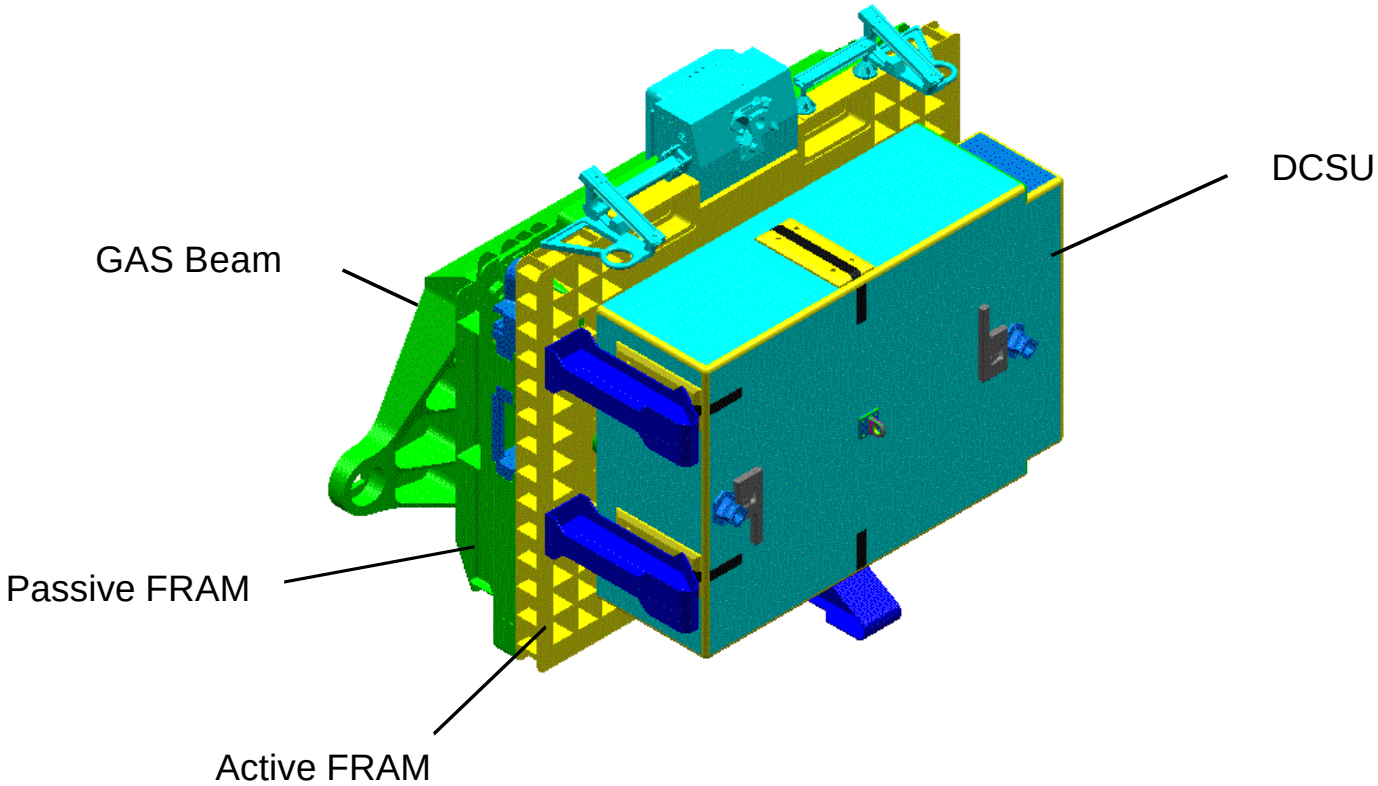

Open Work

Pad – Launch Package

• MPLM & SSRMS/SLP Transfer To Orbiter	ECD 4/7
• MPLM / Orbiter IVT	ECD 4/9
• Payload Closeout / PLBD Close For Flight	ECD 4/10
• Middeck Payload Stow	ECD 4/18
• Launch	ECD 4/19

Master Milestone Schedule

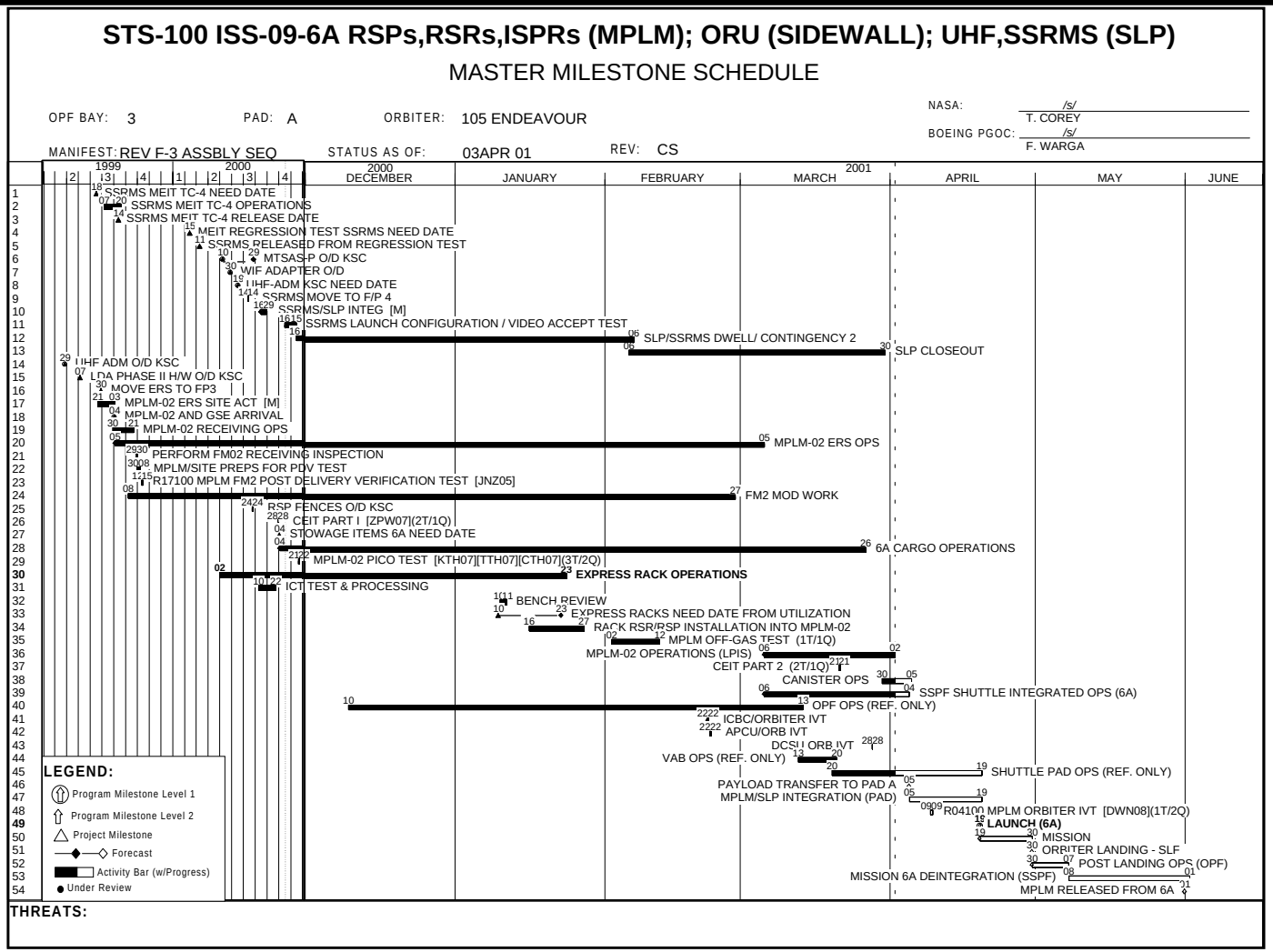

Middeck Payload Requirements

Experiment	Installation	IVT	Ascent Power	Launch Delay Requirement	Destow
ADVASC-GC	</=L-84 Hrs	No	No	8 Days	Xfer to ISS
ADVASC Stowage	</=L-84 Hrs	No	No	31 Days	Xfer to ISS
CGBA	</=L-24 Hrs	Yes	Yes	48 Hours	Xfer to ISS
CPCG-H	</=L-24 Hrs	Yes	Yes	96 Hours	Xfer to ISS
PCG-STES (2)	</=L-24 Hrs	Yes	Yes	48 Hours	Xfer to ISS
PCS-TS	</=L-5 Days	No	No	9 Days	Xfer to ISS
IMAX3D Film Cans	</=L-7 Days	No	No	15 Days	Runway
ICBC3D DAT Boxes	Nominal	No	No	None	Runway
ICBC3D Audio Recorder Batteries	</=L-3 Days	No	No	16 Days from turnover	OPF/MDD

Launch Delay

- ICBC-3D
  - Camera must be refurbished 85 days from installation into Orbiter
    - Good until ~May 17
  - Time may be extended with ICBC-3D Mission Manager approval
- MPLM, SSRMS/SLP, FRAM/DCSU, and APCU have no launch delay requirements

Open CoFR Exceptions

LPRR - CoFR 1

Endorsement Code	Description	Plan to Close	ECD
b.1 & b.2	MPLM FM-2 design baseline has not been fully defined. Comparison of the as-designed to the as-built has not been completed	Obtain remaining design baseline and complete as-design and as-built compare and resolve/document any discrepancies	4/5/01

SORR - CoFR 2

Endorsement Code	Description	Plan to Close	ECD
m.	Ground Safety Review of the Commercial Generic Bioprocessing Apparatus is not completed.	The Integrated Cargo Hazard Assessment will be completed ~ one week after completion of CGBA Ground Safety Review	4/12/01 (NLT)

- **No new exceptions for FRR**

READINESS STATEMENT

- Pending completion of the identified standard open work and resolution of the identified CoFR Exceptions, KSC ISS/Payloads Processing Directorate is ready to proceed with launch and on-orbit stage operations for Launch Package 6A.